DWG. NO.

# GPL SERIES

SHEET 1 OF 4

REV. -

METAL STAMP TO READ:
1. PU OR PUC
2. "CAT. NO"
3. "ROD"
4. "I.P.S."
5. "CONDUCTOR RANGE"
6. "DB" (EXCEPT NON-UL PARTS)
7. "INSTALLATION TORQUE"
8. c UL us (EXCEPT NON-UL PARTS)

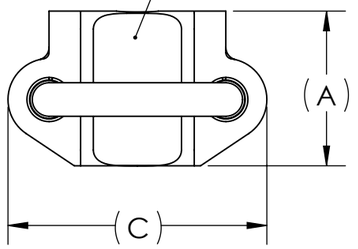


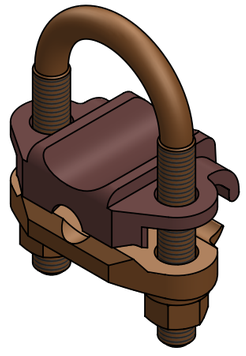

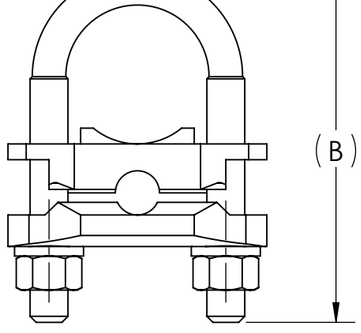


| REV. | CAT. NO. | ACCOMODATES ROD | ACCOMODATES IPS | CONDUCTOR RANGE | DIMENSIONS A | DIMENSIONS B | DIMENSIONS C | BOLT SIZE | HEX SIZE | INSTALL TORQUE |
|---|---|---|---|---|---|---|---|---|---|---|
| 07 | GPL-1 ** | 1/2 | 1/4 | 8 SOL.-4 STR. | 1.38 | 2.50 | 1.88 | 3/8 | 9/16 | - |
| 07 | GPL-2 ** | | | 4 SOL.-2/0 STR. | 1.63 | 2.50 | 1.88 | 3/8 | 9/16 | - |
| 09 | GPL-3 ** | | | 2/0 SOL.-250 MCM | 1.88 | 2.50 | 1.88 | 3/8 | 9/16 | 240 IN•LB |
| 11 | GPL-4 | 5/8 OR 3/4 | 3/8 | 8 SOL.-4 STR. | 1.38 | 2.75 | 2.00 | 3/8 | 9/16 | - |
| 01 | GPL-5 | | | 4 SOL.-2/0 STR. | 1.63 | 2.75 | 2.00 | 3/8 | 9/16 | - |
| 01 | GPL-6 | | | 2/0 SOL.-250 MCM | 1.88 | 2.75 | 2.00 | 3/8 | 9/16 | 240 IN•LB |
| 08 | GPL-7 * | 5/8 OR 1 | 3/8 OR 3/4 | 300-500 MCM | 2.25 | 3.50 | 2.38 | 1/2 | 3/4 | - |
| 08 | GPL-8 | 7/8 OR 1 | 1/2 OR 3/4 | 8 SOL.-4 STR. | 1.38 | 2.63 | 2.38 | 3/8 | 9/16 | - |
| 10 | GPL-9 | | | 4 SOL.-2/0 STR. | 1.63 | 3.31 | 2.38 | 3/8 | 9/16 | - |
| 10 | GPL-10 | | | 2/0 SOL.-250 MCM | 1.88 | 3.31 | 2.38 | 3/8 | 9/16 | 240 IN•LB |
| 06 | GPL-12 * | | | 500-750 MCM | 2.63 | 3.75 | 2.75 | 1/2 | 3/4 | - |
| 05 | GPL-13 * | | | 750-1000 MCM | 3.00 | 4.00 | 3.50 | 1/2 | 3/4 | - |
| 08 | GPL-14 | - | 1 | 8 SOL.-4 STR. | 1.38 | 2.75 | 2.63 | 3/8 | 9/16 | - |
| 11 | GPL-15 | | | 4 SOL.-2/0 STR. | 1.63 | 2.75 | 2.63 | 3/8 | 9/16 | - |
| 12 | GPL-16 | | | 2/0 SOL.-250 MCM | 1.88 | 3.25 | 2.63 | 3/8 | 9/16 | 240 IN•LB |
| 05 | GPL-17 * | | | 300-500 MCM | 2.38 | 4.50 | 3.00 | 1/2 | 3/4 | - |
| 07 | GPL-18 * | | | 500-750 MCM | 2.63 | 4.50 | 3.00 | 1/2 | 3/4 | - |
| 04 | GPL-19 * | | | 750-1000 MCM | 3.00 | 4.75 | 3.50 | 1/2 | 3/4 | - |
| 09 | GPL-20 | - | 1 1/4 | 8 SOL.-4 STR. | 1.38 | 3.50 | 3.00 | 3/8 | 9/16 | - |
| 09 | GPL-21 | | | 4 SOL.-2/0 STR. | 1.63 | 3.50 | 3.00 | 3/8 | 9/16 | - |
| 10 | GPL-22 | | | 2/0 SOL.-250 MCM | 1.88 | 3.50 | 3.00 | 3/8 | 9/16 | 240 IN•LB |
| 06 | GPL-23 * | | | 300-500 MCM | 2.38 | 4.25 | 3.38 | 1/2 | 3/4 | - |
| 04 | GPL-24 * | | | 500-750 MCM | 2.75 | 5.00 | 3.75 | 1/2 | 3/4 | - |
| 04 | GPL-25 * | | | 750-1000 MCM | 3.00 | 5.50 | 4.25 | 1/2 | 3/4 | - |

*NOT cULus LISTED

** NOT UL LISTED FOR 1/2 I.P.S.

NOTES:
1. ALL DIMENSIONS IN INCHES UNLESS OTHERWISE SPECIFIED
2. MANUFACTURED FROM HIGH COPPER CONTENT ALLOY
3. USED TO CONNECT COPPER GROUND CONDUCTOR TO WATER PIPE, ROD, OR STRUCTURED TUBE
4. CLAMP DESIGN ALLOWS GROUND CONDUCTOR TO RUN PARALLEL TO PIPE OR TO BE INSTALLED AT RIGHT ANGLE FOR GROUNDING SEVERAL PARALLEL PIPES
5. CONNECTORS ARE cULus LISTED FOR GROUNDING, BONDING, AND DIRET BURIAL APPLICATIONS PER UL467

| QTY. | PT. | NAME OR DESCRIPTION |
|---|---|---|
| 2 | | SILICON BRONZE LOCK WASHER |
| 2 | | SILICON BRONZE HEX NUT |
| 1 | | SILICON BRONZE BOLT |
| 1 | | BRONZE CLAMP CAP |
| 1 | | BRONZE CLAMP BODY |

SEE TABLE — CAT. NO.

BRONZE GROUND CLAMP
for
COPPER CONDUCTORS

REF. DWG'S: 1N33-21973 — H:\1N33\GPL SERIES

PENNUNION™
229 WATERFORD STREET
EDINBORO, PA 16412 USA

DRAWN BY: DT — DATE: 11/2/2023 — CHK'D: PJO

SCALE: 2:3 — INTERPRET PER ASME Y14.5-2009 — FILE: 1N33

SIZE: B

DWG. NO. GPL SERIES SHEET 1 OF 4

REV. -

THIS DOCUMENT CONTAINS INFORMATION PROPRIETARY TO PENN-UNION CO. LLC. IT IS SUBMITTED IN CONFIDENCE AND IS TO BE USED SOLELY FOR THE PURPOSE FOR WHICH IT IS FURNISHED AND MUST BE RETURNED UPON REQUEST. THIS DOCUMENT AND SUCH INFORMATION IS NOT TO BE REPRODUCED, TRANSMITTED, DISCLOSED, OR USED OTHERWISE IN WHOLE OR IN PART WITHOUT THE EXPRESS CONSENT OF PENN-UNION CO. LLC.

DWG. NO. | REV. -

# GPL SERIES

SHEET 2 OF 4

METAL STAMP TO READ:
1. PU OR PUC
2. "CAT. NO"
3. "ROD"
4. "I.P.S."
5. "CONDUCTOR RANGE"
6. "DB" (EXCEPT NON-UL PARTS)
7. "INSTALLATION TORQUE"
8. c UL us (EXCEPT NON-UL PARTS)

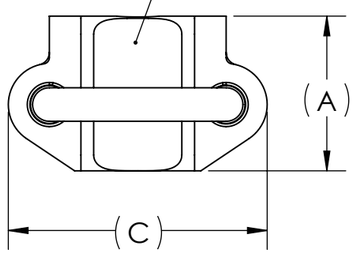


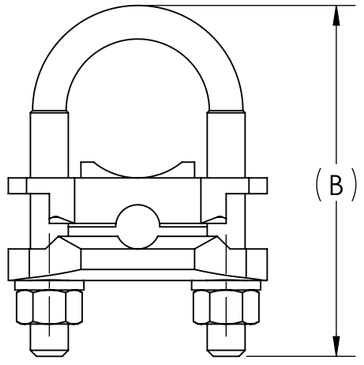


| REV. | CAT. NO. | ACCOMODATES ROD | ACCOMODATES IPS | CONDUCTOR RANGE | DIMENSIONS A | DIMENSIONS B | DIMENSIONS C | BOLT SIZE | HEX SIZE | INSTALL TORQUE |
|---|---|---|---|---|---|---|---|---|---|---|
| 08 | GPL-26 | - | 1 1/2 | 8 SOL.-4 STR. | 1.38 | 4.00 | 3.25 | 3/8 | 9/16 | - |
| 08 | GPL-27 | | | 4 SOL.-2/0 STR. | 1.63 | 4.00 | 3.25 | 3/8 | 9/16 | - |
| 11 | GPL-28 | | | 2/0 SOL.-250 MCM | 1.88 | 4.00 | 3.25 | 3/8 | 9/16 | 240 IN•LB |
| 06 | GPL-29 * | | | 300-500 MCM | 2.38 | 4.63 | 3.63 | 1/2 | 3/4 | - |
| 08 | GPL-30 * | | | 500-750 MCM | 2.75 | 5.25 | 4.00 | 1/2 | 3/4 | - |
| 05 | GPL-31 * | | | 750-1000 MCM | 3.00 | 5.75 | 4.50 | 1/2 | 3/4 | - |
| 09 | GPL-32 | - | 2 | 8 SOL.-4 STR. | 1.38 | 4.25 | 3.75 | 3/8 | 9/16 | - |
| 07 | GPL-33 | | | 4 SOL.-2/0 STR. | 1.63 | 4.25 | 3.75 | 3/8 | 9/16 | - |
| 12 | GPL-34 | | | 2/0 SOL.-250 MCM | 1.88 | 4.25 | 3.75 | 3/8 | 9/16 | 240 IN•LB |
| 08 | GPL-35 * | | | 300-500 MCM | 2.38 | 5.25 | 4.00 | 1/2 | 3/4 | - |
| 05 | GPL-36 | | | 500-750 MCM | 2.75 | 5.50 | 4.50 | 1/2 | 3/4 | - |
| 05 | GPL-37 * | | | 750-1000 MCM | 3.00 | 6.00 | 5.00 | 1/2 | 3/4 | - |
| 09 | GPL-38 | - | 2 1/2 | 8 SOL.-4 STR. | 1.38 | 5.00 | 4.25 | 3/8 | 9/16 | - |
| 08 | GPL-39 | | | 4 SOL.-2/0 STR. | 1.63 | 5.00 | 4.25 | 3/8 | 9/16 | - |
| 11 | GPL-40 | | | 2/0 SOL.-250 MCM | 1.88 | 5.00 | 4.25 | 3/8 | 9/16 | 240 IN•LB |
| 06 | GPL-41 | | | 300-500 MCM | 2.38 | 5.63 | 4.25 | 1/2 | 3/4 | - |
| 06 | GPL-42 | | | 500-750 MCM | 2.75 | 6.00 | 5.00 | 1/2 | 3/4 | - |
| 05 | GPL-43 | | | 750-1000 MCM | 3.00 | 6.50 | 5.50 | 1/2 | 3/4 | - |
| 08 | GPL-44 | - | 3 | 8 SOL.-4 STR. | 1.38 | 5.50 | 4.75 | 3/8 | 9/16 | - |
| 09 | GPL-45 | | | 4 SOL.-2/0 STR. | 1.63 | 5.50 | 4.75 | 3/8 | 9/16 | - |
| 09 | GPL-46 | | | 2/0 SOL.-250 MCM | 1.88 | 5.50 | 4.75 | 3/8 | 9/16 | 240 IN•LB |
| 03 | GPL-47 * | | | 300-500 MCM | 2.38 | 6.25 | 5.25 | 1/2 | 3/4 | - |
| 02 | GPL-48 * | | | 500-750 MCM | 2.75 | 6.75 | 5.50 | 1/2 | 3/4 | - |
| 03 | GPL-49 * | | | 750-1000 MCM | 3.00 | 7.25 | 6.00 | 1/2 | 3/4 | - |

*NOT CULUS LISTED

| QTY. | PT. | NAME OR DESCRIPTION |
|---|---|---|
| 2 | | SILICON BRONZE LOCK WASHER |
| 2 | | SILICON BRONZE HEX NUT |
| 1 | | SILICON BRONZE BOLT |
| 1 | | BRONZE CLAMP CAP |
| 1 | | BRONZE CLAMP BODY |

SEE TABLE | CAT. NO.

BRONZE GROUND CLAMP
for
COPPER CONDUCTORS

REF. DWG'S: 1N33-21973 | H:\1N33\GPL SERIES

PENNUNION™
229 WATERFORD STREET
EDINBORO, PA 16412 USA

DRAWN BY: DT | DATE: 11/2/2023 | CHK'D: PJO
SCALE: 2:3 | INTERPRET PER ASME Y14.5-2009 | FILE: 1N33
SIZE: B

DWG. NO. GPL SERIES SHEET 2 OF 4 | REV. -

NOTES:
1. ALL DIMENSIONS IN INCHES UNLESS OTHERWISE SPECIFIED
2. MANUFACTURED FROM HIGH COPPER CONTENT ALLOY
3. USED TO CONNECT COPPER GROUND CONDUCTOR TO WATER PIPE, ROD, OR STRUCTURED TUBE
4. CLAMP DESIGN ALLOWS GROUND CONDUCTOR TO RUN PARALLEL TO PIPE OR TO BE INSTALLED AT RIGHT ANGLE FOR GROUNDING SEVERAL PARALLEL PIPES
5. CONNECTORS ARE cULus LISTED FOR GROUNDING, BONDING, AND DIRET BURIAL APPLICATIONS PER UL467

THIS DOCUMENT CONTAINS INFORMATION PROPRIETARY TO PENN-UNION CO. LLC. IT IS SUBMITTED IN CONFIDENCE AND IS TO BE USED SOLELY FOR THE PURPOSE FOR WHICH IT IS FURNISHED AND MUST BE RETURNED UPON REQUEST. THIS DOCUMENT AND SUCH INFORMATION IS NOT TO BE REPRODUCED, TRANSMITTED, DISCLOSED, OR USED OTHERWISE IN WHOLE OR IN PART WITHOUT THE EXPRESS CONSENT OF PENN-UNION CO. LLC.

DWG. NO. | REV. -

# GPL SERIES

SHEET 3 OF 4

METAL STAMP TO READ:
1. PU OR PUC
2. "CAT. NO"
3. "ROD"
4. "I.P.S."
5. "CONDUCTOR RANGE"
6. "DB" (EXCEPT NON-UL PARTS)
7. "INSTALLATION TORQUE"
8. c UL us (EXCEPT NON-UL PARTS)

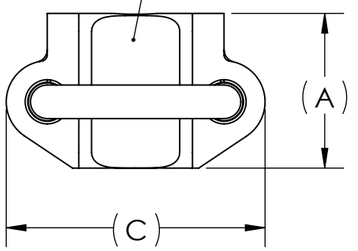


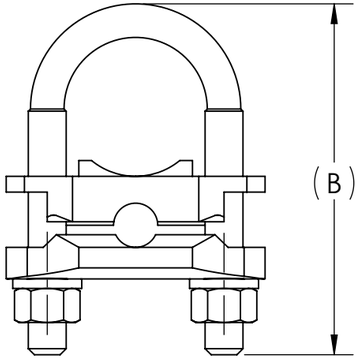


| REV. | CAT. NO. | ACCOMODATES ROD | ACCOMODATES IPS | CONDUCTOR RANGE | DIMENSIONS A | DIMENSIONS B | DIMENSIONS C | BOLT SIZE | HEX SIZE | INSTALL TORQUE |
|---|---|---|---|---|---|---|---|---|---|---|
| 08 | GPL-50 | - | 3 1/2 | 8 SOL.-4 STR. | 1.38 | 6.25 | 5.25 | 3/8 | 9/16 | - |
| 08 | GPL-51 | | | 4 SOL.-2/0 STR. | 1.63 | 6.25 | 5.25 | 3/8 | 9/16 | - |
| 09 | GPL-52 | | | 2/0 SOL.-250 MCM | 1.88 | 6.25 | 5.25 | 3/8 | 9/16 | 240 IN•LB |
| 06 | GPL-53 * | | | 300-500 MCM | 2.38 | 6.75 | 5.75 | 1/2 | 3/4 | - |
| 06 | GPL-54 * | | | 500-750 MCM | 2.75 | 7.25 | 6.00 | 1/2 | 3/4 | - |
| - | GPL-55 * | | | 750-1000 MCM | 3.00 | 8.00 | 6.50 | 1/2 | 3/4 | - |
| 10 | GPL-56 | - | 4 | 8 SOL.-4 STR. | 1.38 | 6.38 | 5.75 | 3/8 | 9/16 | - |
| 11 | GPL-57 | | | 4 SOL.-2/0 STR. | 1.63 | 6.38 | 5.75 | 3/8 | 9/16 | - |
| 09 | GPL-58 | | | 2/0 SOL.-250 MCM | 1.88 | 6.38 | 5.75 | 3/8 | 9/16 | 240 IN•LB |
| 05 | GPL-59 * | | | 300-500 MCM | 2.38 | 6.75 | 6.25 | 1/2 | 3/4 | - |
| 07 | GPL-60 * | | | 500-750 MCM | 2.75 | 8.00 | 6.50 | 1/2 | 3/4 | - |
| 04 | GPL-61 * | | | 750-1000 MCM | 3.00 | 8.50 | 7.00 | 1/2 | 3/4 | - |
| 07 | GPL-68 | - | 5 | 8 SOL.-4 STR. | 1.38 | 6.38 | 6.75 | 3/8 | 9/16 | - |
| 09 | GPL-69 | | | 4 SOL.-2/0 STR. | 1.53 | 5.63 | 6.81 | 3/8 | 9/16 | - |
| 09 | GPL-70 | | | 2/0 SOL.-250 MCM | 1.88 | 6.13 | 6.81 | 3/8 | 9/16 | 240 IN•LB |
| 08 | GPL-71 * | | | 300-500 MCM | 2.31 | 6.13 | 7.13 | 1/2 | 3/4 | - |

*NOT CULUS LISTED

NOTES:
1. ALL DIMENSIONS IN INCHES UNLESS OTHERWISE SPECIFIED
2. MANUFACTURED FROM HIGH COPPER CONTENT ALLOY
3. USED TO CONNECT COPPER GROUND CONDUCTOR TO WATER PIPE, ROD, OR STRUCTURED TUBE
4. CLAMP DESIGN ALLOWS GROUND CONDUCTOR TO RUN PARALLEL TO PIPE OR TO BE INSTALLED AT RIGHT ANGLE FOR GROUNDING SEVERAL PARALLEL PIPES
5. CONNECTORS ARE cULus LISTED FOR GROUNDING, BONDING, AND DIRET BURIAL APPLICATIONS PER UL467

| QTY. | PT. | NAME OR DESCRIPTION |
|---|---|---|
| 2 | | SILICON BRONZE LOCK WASHER |
| 2 | | SILICON BRONZE HEX NUT |
| 1 | | SILICON BRONZE BOLT |
| 1 | | BRONZE CLAMP CAP |
| 1 | | BRONZE CLAMP BODY |

BRONZE GROUND CLAMP
for
COPPER CONDUCTORS

REF. DWG'S: 1N33-21973 H:\1N33\GPL SERIES

PENNUNION™
229 WATERFORD STREET
EDINBORO, PA 16412 USA

DRAWN BY: DT DATE: 11/2/2023 CHK'D: PJO
SCALE: 2:3 INTERPRET PER ASME Y14.5-2009 FILE: 1N33
SIZE: B

SEE TABLE CAT. NO.

DWG. NO. GPL SERIES SHEET 3 OF 4 REV. -

THIS DOCUMENT CONTAINS INFORMATION PROPRIETARY TO PENN-UNION CO. LLC. IT IS SUBMITTED IN CONFIDENCE AND IS TO BE USED SOLELY FOR THE PURPOSE FOR WHICH IT IS FURNISHED AND MUST BE RETURNED UPON REQUEST. THIS DOCUMENT AND SUCH INFORMATION IS NOT TO BE REPRODUCED, TRANSMITTED, DISCLOSED, OR USED OTHERWISE IN WHOLE OR IN PART WITHOUT THE EXPRESS CONSENT OF PENN-UNION CO. LLC.

DWG. NO. GPL SERIES REV. -
SHEET 4 OF 4

| REV. | CAT. NO. | ACCOMODATES | | CONDUCTOR RANGE | DIMENSIONS | | | BOLT SIZE | HEX SIZE | INSTALL TORQUE |
|---|---|---|---|---|---|---|---|---|---|---|
| | | ROD | IPS | | A | B | C | | | |
| 09 | GPL-75 | - | 6 | 4 SOL.-2/0 STR. | 1.53 | 6.70 | 7.88 | 3/8 | 9/16 | - |
| 09 | GPL-76 | | | 2/0 SOL.-250 MCM | 2.00 | 6.60 | 7.90 | 3/8 | 9/16 | - |
| 04 | GPL-77 * | | | 300-500 MCM | 2.31 | 6.19 | 8.19 | 1/2 | 3/4 | 240 IN•LB |
| 09 | GPL-87 | - | 8 | 4 SOL.-2/0 STR. | 1.53 | 7.13 | 9.88 | 3/8 | 9/16 | - |

*NOT CULUS LISTED

METAL STAMP TO READ:
1. PU OR PUC
2. "CAT. NO"
3. "ROD"
4. "I.P.S."
5. "CONDUCTOR RANGE"
6. "DB" (EXCEPT NON-UL PARTS)
7. "INSTALLATION TORQUE"
8. c UL us (EXCEPT NON-UL PARTS)

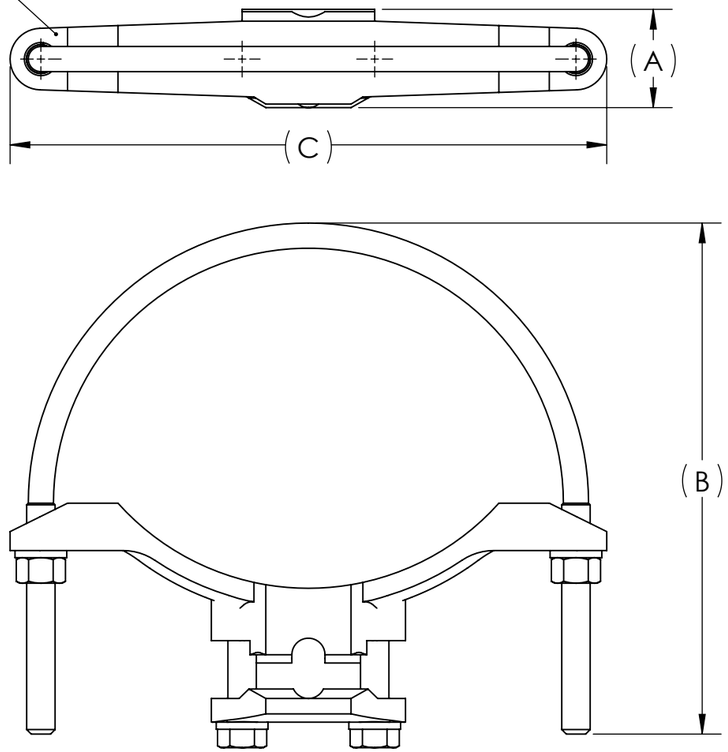


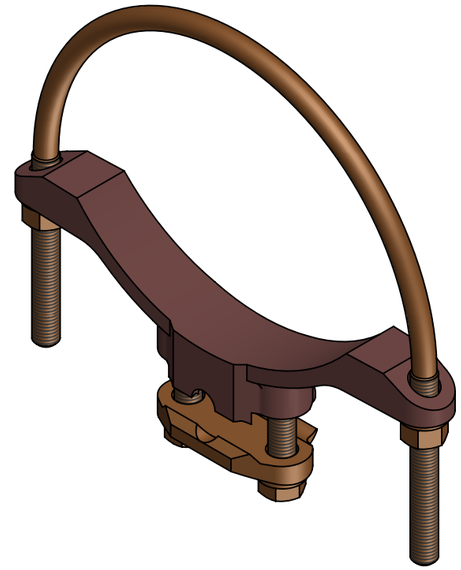

NOTES:
1. ALL DIMENSIONS IN INCHES UNLESS OTHERWISE SPECIFIED
2. MANUFACTURED FROM HIGH COPPER CONTENT ALLOY
3. USED TO CONNECT COPPER GROUND CONDUCTOR TO WATER PIPE, ROD, OR STRUCTURED TUBE
4. CLAMP DESIGN ALLOWS GROUND CONDUCTOR TO RUN PARALLEL TO PIPE OR TO BE INSTALLED AT RIGHT ANGLE FOR GROUNDING SEVERAL PARALLEL PIPES
5. CONNECTORS ARE cULus LISTED FOR GROUNDING, BONDING, AND DIRET BURIAL APPLICATIONS PER UL467

| QTY. | PT. | NAME OR DESCRIPTION |
|---|---|---|
| | 4 | SILICON BRONZE LOCK WASHER |
| | 2 | SILICON BRONZE HEX BOLT |
| | 2 | SILICON BRONZE HEX NUT |
| | 1 | SILICON BRONZE BOLT |
| | 1 | BRONZE CLAMP CAP |

SEE TABLE — CAT. NO.

BRONZE GROUND CLAMP
for
COPPER CONDUCTORS

REF. DWG'S: 1N33-21973 H:\1N33\GPL SERIES

PENNUNION™
229 WATERFORD STREET
EDINBORO, PA 16412 USA

DRAWN BY: DT DATE: 11/2/2023 CHK'D: PJO
SCALE: 1:2 INTERPRET PER ASME Y14.5-2009 FILE: 1N33
SIZE: B

DWG. NO. GPL SERIES SHEET 4 OF 4 REV. -

THIS DOCUMENT CONTAINS INFORMATION PROPRIETARY TO PENN-UNION CO. LLC. IT IS SUBMITTED IN CONFIDENCE AND IS TO BE USED SOLELY FOR THE PURPOSE FOR WHICH IT IS FURNISHED AND MUST BE RETURNED UPON REQUEST. THIS DOCUMENT AND SUCH INFORMATION IS NOT TO BE REPRODUCED, TRANSMITTED, DISCLOSED, OR USED OTHERWISE IN WHOLE OR IN PART WITHOUT THE EXPRESS CONSENT OF PENN-UNION CO. LLC.