DWG. NO. FULA-S SERIES | REV. 8

CAT. NO.	CONDUCTOR RANGE	APPROX. WEIGHT (LB)	DIE SIZE	NO. OF CRIMPS
FULA-010-S	1/0 STR., 3/0 SOL., 2/0 COMPACT, 1/0 ACSR	0.268	1 1/8-2, 316, 705	3
FULA-013-S	2/0 STR., 4/0 SOL., 3/0 COMPACT, 2/0 ACSR	0.268		
FULA-017-S	3/0 STR., 4/0 COMPACT, 3/0 ACSR	0.268		
FULA-025-S	4/0 STR., 250 KCMIL, 250 & 300 COMPACT, 4/0 ACSR	0.282		
FULA-030-S	300 KCMIL, 350 COMPACT, 266.8 18/1 ACSR	0.268		
FULA-035-S	350 KCMIL, 400 COMPACT, 336.4 18/1 ACSR	0.268		
FULA-R033-S	400 KCMIL, 500 COMPACT, 336.4 26/7 ACSR	0.268		
FULA-045-S	450 KCMIL, 397.5 18/1, 26/7 ACSR	0.268		
FULA-050-S	500 KCMIL, 477 18/1 ACSR	0.268		

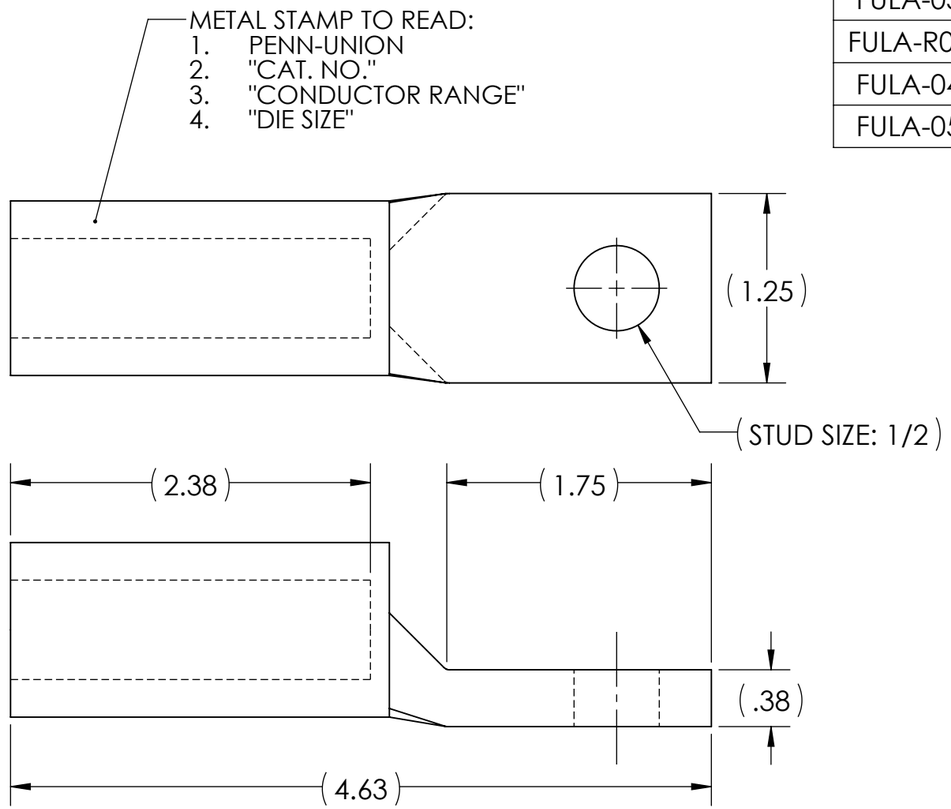

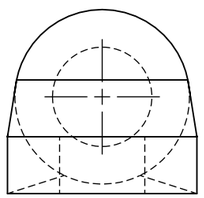

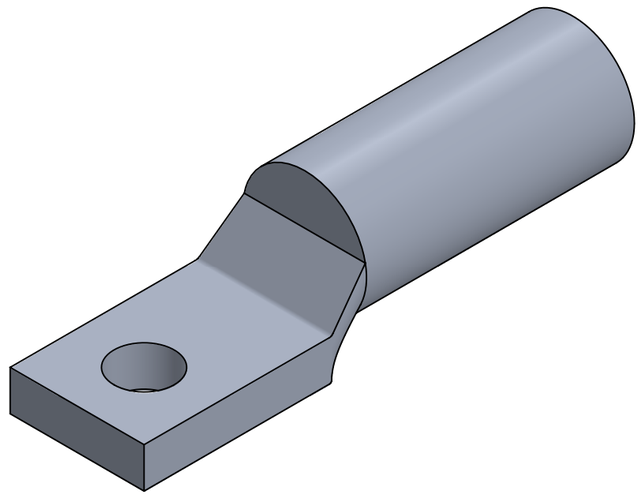

NOTES:
1. MANUFACTURED FROM HIGH STRENGTH ALUMINUN ALLOY
2. FOR ALUMINUM, COPPER, OR ACSR CONDUCTORS
3. NARROW TONGUE DESIGN FOR LIMITED SPACE APPLICATIONS
4. CONNECTORS ARE PRE-FILLED WITH OXIDE INHIBITOR
5. COMPLETELY CLOSED TRANSITIONS PROTECT THE END OF CABLE FROM ENVIRONMENTAL HAZARDS
6. THREE COMMON BARREL O.D. SIZES ACCOMMODATE A RANGE FROM #10 STR. - 500 KCMIL
7. REQUIRES ONLY THREE INSTALLATION DIES TO CRIMP 15 CONDUCTOR RANGES
8. FOR TIN PLATING, SUFFIX CATALOG NUMBER WITH "-TN"
9. COLOR CODED END CAPS PROVIDED TO PREVENT FOREIGN MATERIALS FROM ENTERING AND CONTAMINATING THE CONNECTOR PRIOR TO USE
10. CRIMP LOCATION MARKING NOT SHOWN IN VIEWS

RoHS COMPLIANT

NO.	ECN	DATE
REVISIONS		
8	9166	5/22/1990
7	8951-C	4/25/1988
6	8782	2/19/1986
5	8759	10/27/1985

QTY.	PT.	NAME OR DESCRIPTION
	X	COPPER TUBING
SEE TABLE	CAT. NO.	ALUMINUM COMPRESSION TERMINAL for ALUMINUM, COPPER AND ACSR CONDUCTORS

REF. DWG'S: 4H57-47371 H:\4H57\FULA-S SERIES

PENNUNION™
229 WATERFORD STREET
EDINBORO, PA 16412 USA

DRAWN BY: DT DATE: 10/3/2023 CHK'D: PJO
SCALE: 1:1 INTERPRET PER ASME Y14.5-2009 FILE: 4H57
SIZE: B DWG. NO. FULA-S SERIES REV. 8

THIS DOCUMENT CONTAINS INFORMATION PROPRIETARY TO PENN-UNION CO. LLC. IT IS SUBMITTED IN CONFIDENCE AND IS TO BE USED SOLELY FOR THE PURPOSE FOR WHICH IT IS FURNISHED AND MUST BE RETURNED UPON REQUEST. THIS DOCUMENT AND SUCH INFORMATION IS NOT TO BE REPRODUCED, TRANSMITTED, DISCLOSED, OR USED OTHERWISE IN WHOLE OR IN PART WITHOUT THE EXPRESS CONSENT OF PENN-UNION CO. LLC.