DWG. NO.	FBK SERIES	REV. -

REV	CATALOG NUMBER	COMPRESSION LUG	QTY. OF LUGS	INSTALLATAION TOOLING					BRAID DIMENSIONS			BRAID CIRCULAR MILS	AMPERAGE RATING
				COLOR CODE	PENN-UNION HYDRAULIC TOOL	PENN-UNION DIE CATALOG NO.	BURNDY DIE CATALOG NO.	T&B DIE INDEX NO.	A	B	C		
1	FBK-125	BBLU-1/0-S-FL	20	PINK	TPU-12B	T-12	12	42	240	.16	1.06	77,184 (#1 AWG)	125
1	FBK-285	BBLU-050-D-FL	10	BROWN	TPU-12B	T-20	20	87	120	.38	1.38	303,912 (300 MCM)	285

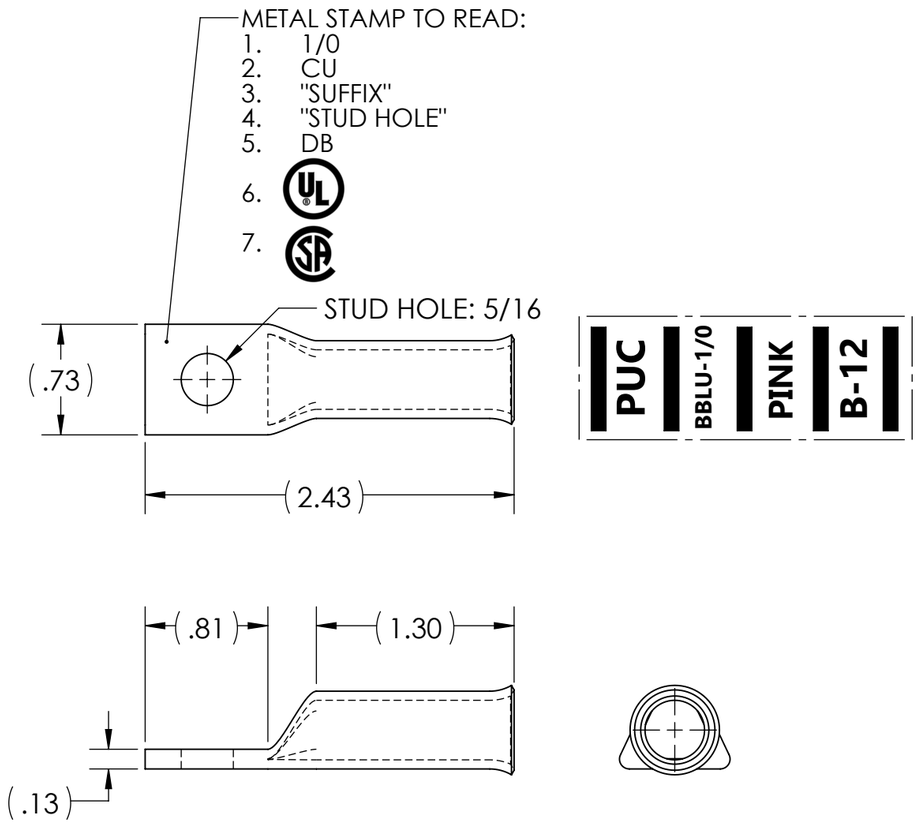

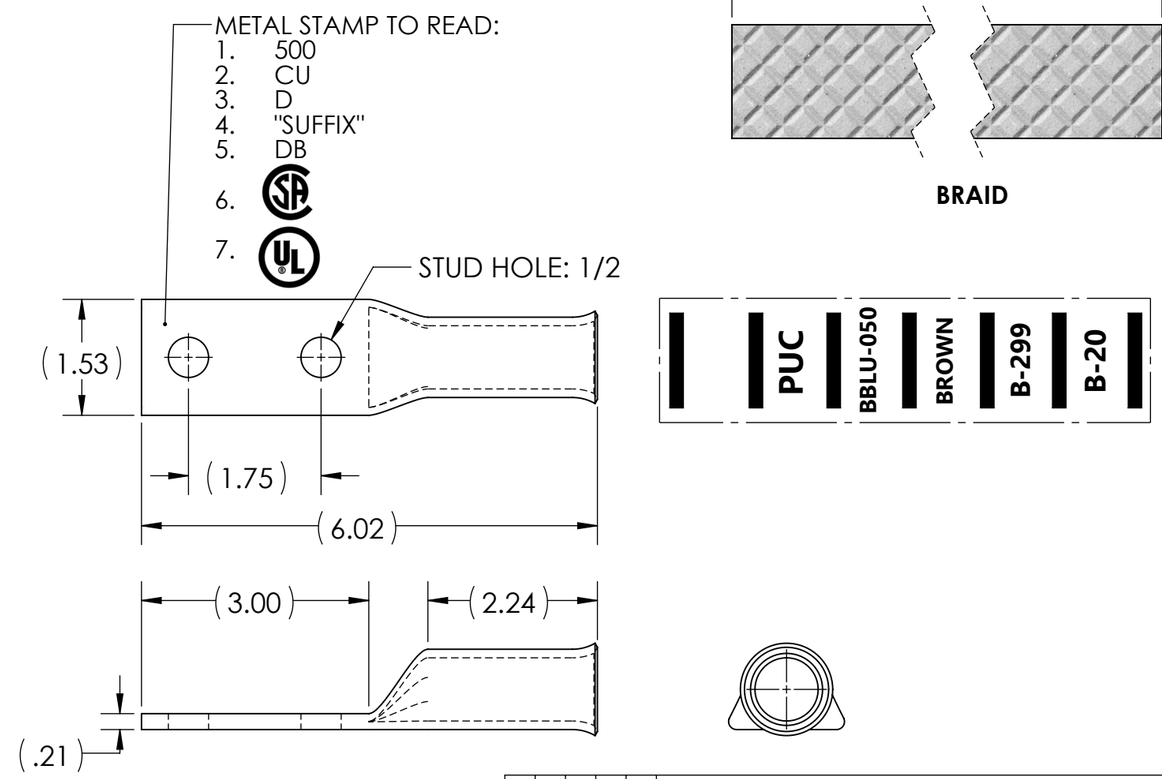

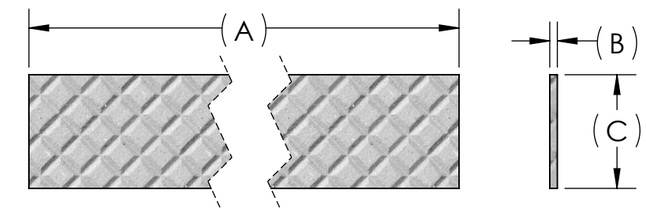

BRAID

NOTES:
1. ALL DIMENSIONS IN INCHES UNLESS OTHERWISE SPECIFIED
2. KITS ARE UL LISTED PER UL486A-B FOR POWER APPLICATIONS UP TO 90°C
3. KITS CONTAIN BRAID MADE FROM HIGH QUALITY COPPER FOR MAXIMUM CONDUCTIVITY
4. KITS INCLUDE PENN-UNION'S TYPE BBLU-FL FLARED LONG BARREL COMPRESSION LUGS
5. BRAID AND COMPRESSION LUGS ARE TIN PLATED TO PROTECT AGAINST CORROSION
6. WOVEN DESIGN OF BRAID ALLOWS FOR MAXIMUM FLEXIBILITY
7. KITS ALLOW USER TO MAKE CUSTOM FLEXIBLE CONNECTIONS TO PRECISELY MATCH REQUIREMENTS
8. ELIMINATES THE LEAD TIME ASSOCIATED WITH SPECIAL ORDERS OR THE USE OF CONNECTORS THAT ARE NOT IDEALLY SUITED FOR THE APPLICATION

QTY.	PT.	NAME OR DESCRIPTION
SEE TABLE	CAT. NO.	FLEXIBLE COPPER BRAID KITS

REF. DWG'S: H:\2S30\FBK SERIES

PENNUNION™
229 WATERFORD STREET
EDINBORO, PA 16412 USA

DRAWN BY: PJO DATE: 7/29/2024 CHK'D: PJO
SCALE: 1:2 INTERPRET PER ASME Y14.5-2009 FILE: 2S30
SIZE: B DWG. NO. FBK SERIES REV. -

THIS DOCUMENT CONTAINS INFORMATION PROPRIETARY TO PENN-UNION CO. LLC. IT IS SUBMITTED IN CONFIDENCE AND IS TO BE USED SOLELY FOR THE PURPOSE FOR WHICH IT IS FURNISHED AND MUST BE RETURNED UPON REQUEST. THIS DOCUMENT AND SUCH INFORMATION IS NOT TO BE REPRODUCED, TRANSMITTED, DISCLOSED, OR USED OTHERWISE IN WHOLE OR IN PART WITHOUT THE EXPRESS CONSENT OF PENN-UNION CO. LLC.