DWG. NO.	REV.
BL3/0-FL	-

REV.	CAT. NO.	STUD HOLE	DIMENSIONS					APPROX. WEIGHT (LB)	PENN-UNION DIELESS TOOLING (NO. OF CRIMPS)	STRIP LENGTH
			A	B	C	D	E			
02	BL3/014FL	1/4	2.25	.99	.85	.11	.90	0.064	TDM-5050 (3) TDM-250-XF (1) TPU-6 (1) TDH-1000 (1)	.94
02	BL3/0516FL	5/16	2.25	.99	.85	.11	.90	0.064		
02	BL3/038FL	3/8	2.25	.99	.85	.11	.90	0.061		
02	BL3/012FL	1/2	2.25	.99	.85	.11	.90	0.059		

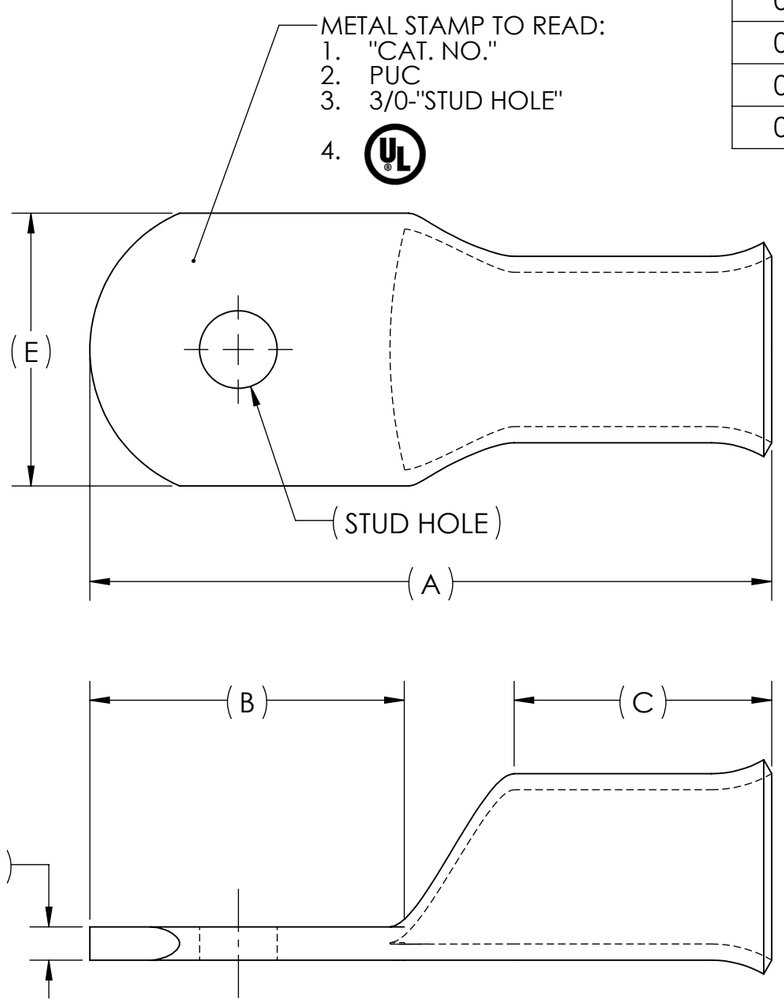

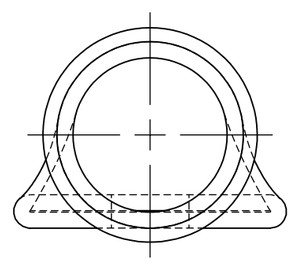

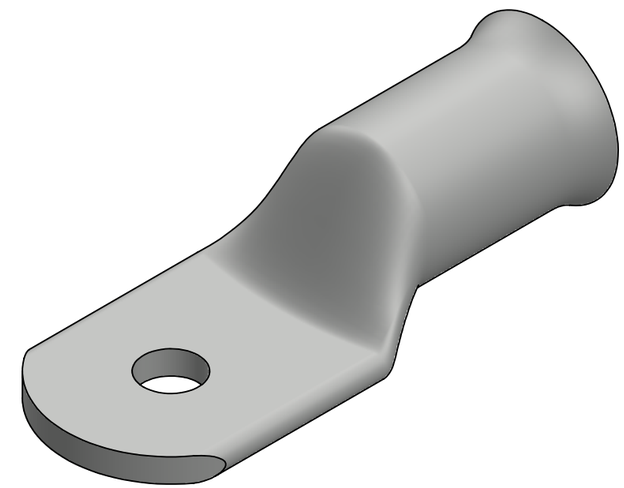

NOTES:
1. ALL DIMENSIONS IN INCHES UNLESS OTHERWISE SPECIFIED
2. SEE INSTALLATION SHEET FOR WIRE SIZE AND TOOLING RECOMMENDATIONS
3. TIN-PLATED TO INHIBIT CORROSION
4. RATED FOR COPPER CONDUCTORS ONLY
5. BEVELED ENTRY FOR EASY CABLE INSERTION
6. CONNECTORS ARE SUITABLE FOR VOLTAGES UP TO 35 KV
7. FOR APPLICATIONS GREATER THAN 2000 VOLTS, CONSULT CABLE MANUFACTURER FOR VOLTAGE STRESS RELIEF INSTRUCTIONS
8. CONNECTORS ARE UL LISTED PER UL486A-B FOR POWER APPLICATIONS UP TO 90°C

RoHS COMPLIANT

NO.	ECN	DATE
REVISIONS		

QTY.	PT.	NAME OR DESCRIPTION
	X	COPPER TUBING
SEE TABLE	CAT. NO.	COPPER BATTERY LUG for 3/0 AWG COPPER CONDUCTORS

REF. DWG'S: 5H13-96917 H:\5H13\BL3.0FL

PENNUNION™
229 WATERFORD STREET
EDINBORO, PA 16412 USA

DRAWN BY: DT DATE: 8/15/2023 CHK'D: MES
SCALE: 2:1 INTERPRET PER ASME Y14.5-2009 FILE: 5H13
SIZE: B DWG. NO. BL3/0-FL REV. -

THIS DOCUMENT CONTAINS INFORMATION PROPRIETARY TO PENN-UNION CO. LLC. IT IS SUBMITTED IN CONFIDENCE AND IS TO BE USED SOLELY FOR THE PURPOSE FOR WHICH IT IS FURNISHED AND MUST BE RETURNED UPON REQUEST. THIS DOCUMENT AND SUCH INFORMATION IS NOT TO BE REPRODUCED, TRANSMITTED, DISCLOSED, OR USED OTHERWISE IN WHOLE OR IN PART WITHOUT THE EXPRESS CONSENT OF PENN-UNION CO. LLC.