DWG. NO.	REV.
BBLU-1DS	-

REV.	CAT. NO.	STUD HOLE	DIMENSIONS						APPROX. WEIGHT (LB)	STRIP LENGTH	INSTALLATION TOOL
			A	B	C	D	E	F			
02	BBLU-1D2	1/2	4.12	2.77	1.38	.09	.70	1.75	0.070	1.31	Y644HS

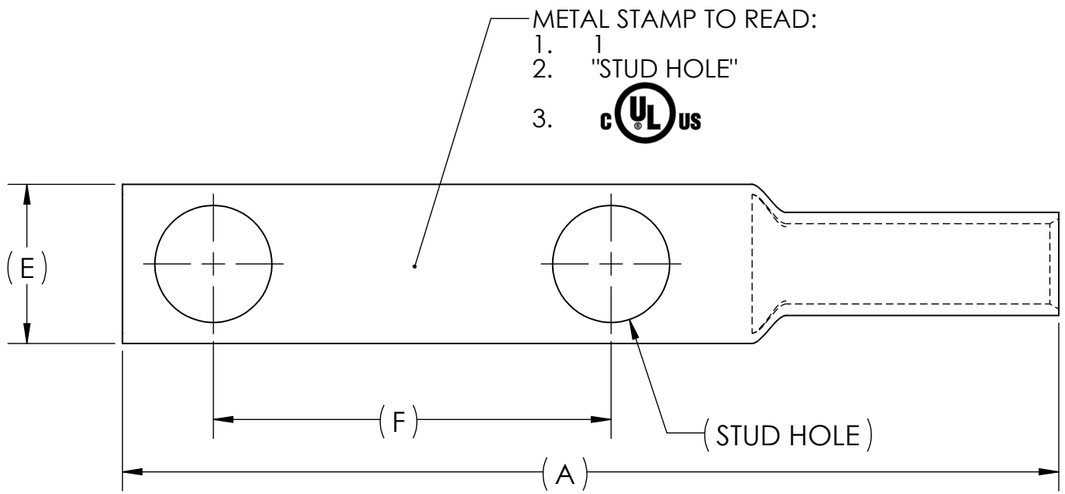

DIE COLOR GREEN
INK STAMP REFERENCE

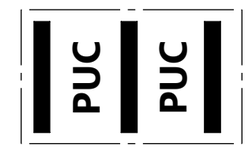

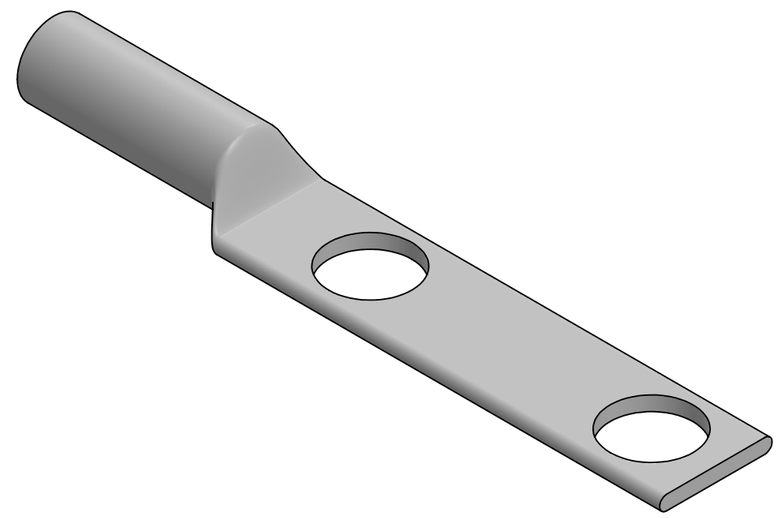

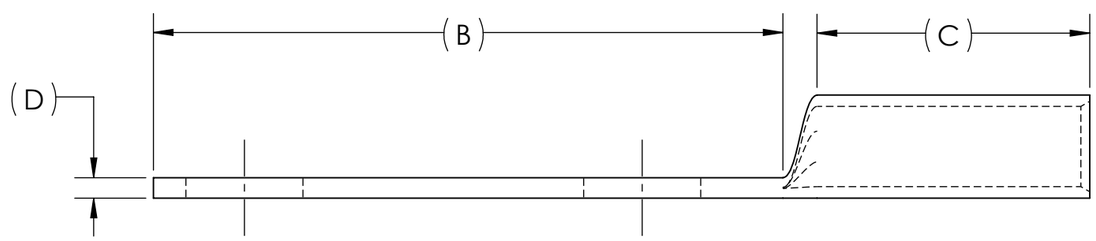

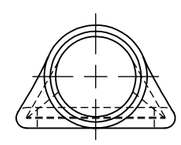

NOTES:
1. ALL DIMENSIONS IN INCHES UNLESS OTHERWISE SPECIFIED
2. TIN-PLATED TO INHIBIT CORROSION
3. RATED FOR COPPER CONDUCTORS ONLY
4. BEVELED ENTRY FOR EASY CABLE INSERTION
5. CONNECTORS ARE SUITABLE FOR USE IN CIRCUITS WITH VOLTAGES UP TO 35 KV
6. FOR APPLICATIONS GREATER THAN 2000 VOLTS, CONSULT CABLE MANUFACTURER FOR VOLTAGE STRESS RELIEF INSTRUCTIONS
7. CONNECTORS ARE cULus LISTED PER UL486A-B FOR POWER APPLICATIONS UP TO 90°C

RoHS COMPLIANT

NO.	ECN	DATE
REVISIONS		

QTY.	PT.	NAME OR DESCRIPTION
	X	COPPER TUBING
SEE TABLE	CAT. NO.	PENN-CRIMP LUG for 1 AWG COPPER CONDUCTORS

REF. DWG'S: 5H08-97829 H:\5H08\BLU-1DS

PENNUNION™
229 WATERFORD STREET
EDINBORO, PA 16412 USA

DRAWN BY: QJB DATE: 7/28/2023 CHK'D: QJB
SCALE: 3:2 INTERPRET PER ASME Y14.5-2009 FILE: 5H08
SIZE: B DWG. NO. BBLU-1DS REV. -

THIS DOCUMENT CONTAINS INFORMATION PROPRIETARY TO PENN-UNION CO. LLC. IT IS SUBMITTED IN CONFIDENCE AND IS TO BE USED SOLELY FOR THE PURPOSE FOR WHICH IT IS FURNISHED AND MUST BE RETURNED UPON REQUEST. THIS DOCUMENT AND SUCH INFORMATION IS NOT TO BE REPRODUCED, TRANSMITTED, DISCLOSED, OR USED OTHERWISE IN WHOLE OR IN PART WITHOUT THE EXPRESS CONSENT OF PENN-UNION CO. LLC.